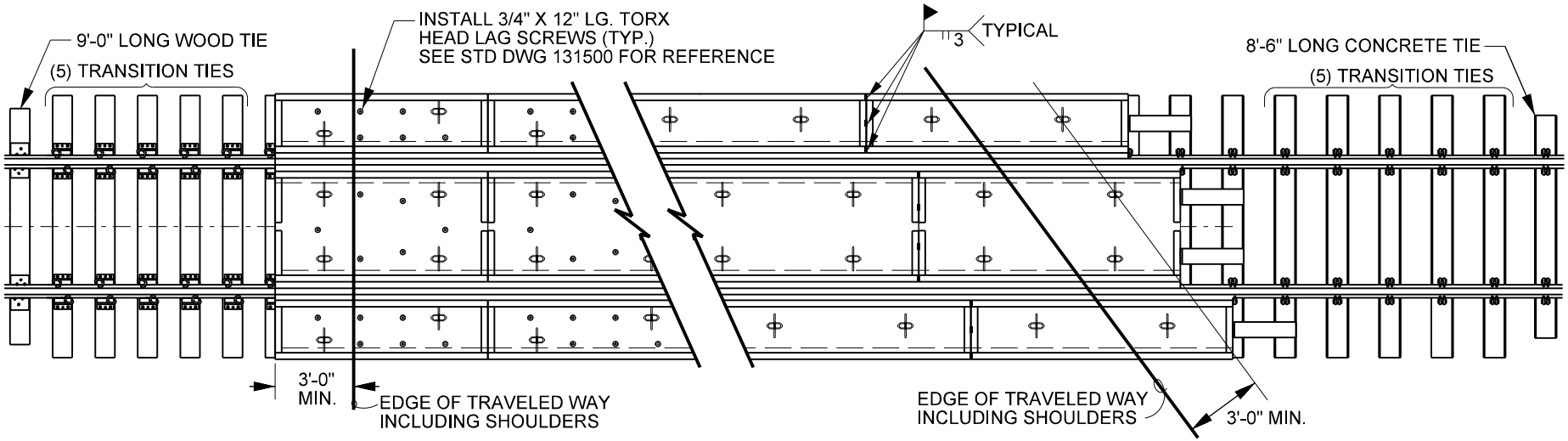


## PLAN VIEW OF PANEL WITH TIMBER TIES

## PLAN VIEW OF PANEL & JOINT WELD LOCATION W/CONCRETE TIES

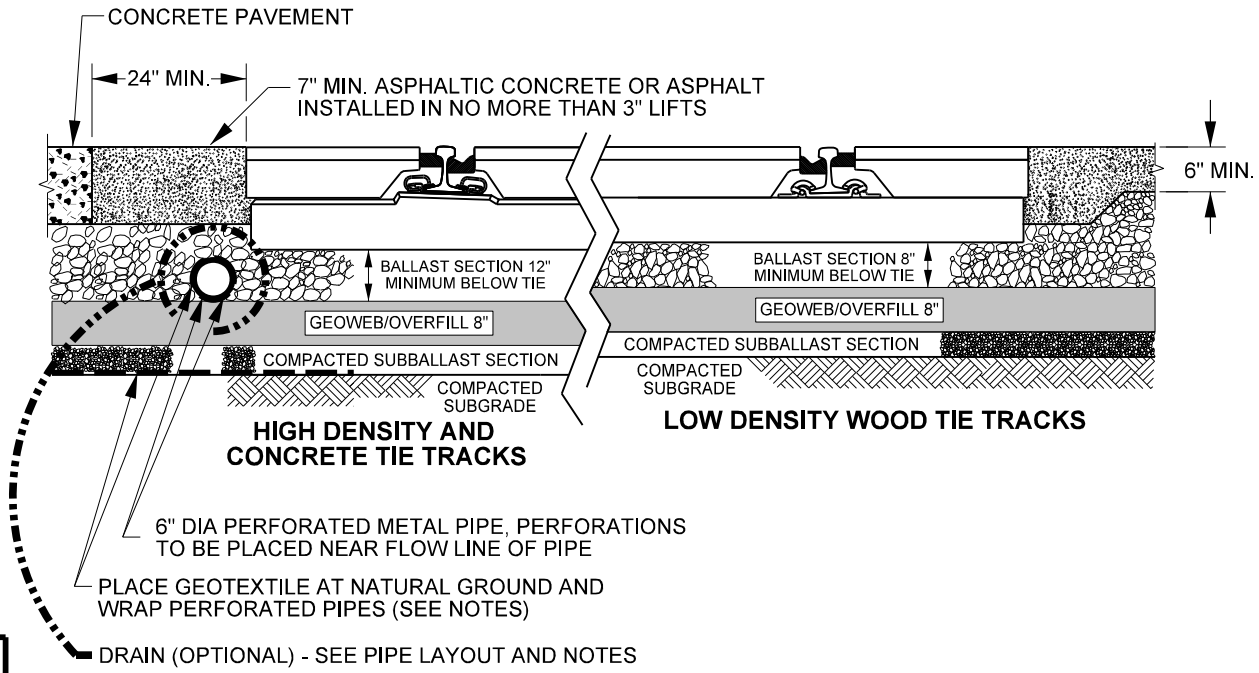


## TYPICAL BALLAST AND ASPHALT DETAIL

NOTES:
SEE PAGE 2 FOR NOTES AND MORE DETAILS.

**UNION PACIFIC RAILROAD ENGINEERING STANDARDS**

# INSTALLATION OF ROAD CROSSINGS W/ PRECAST CONCRETE PANELS

UNION PACIFIC

APPROVED: Eric Gebringer
VP ENGINEERING
ADOPTED: DEC. 19, 1987
REVISED: DEC. 9, 2019
FILE NO.: 0304J

STD DWG
0304J
PAGE 1 OF 2

STD DWG
0304J
PAGE 1 OF 2

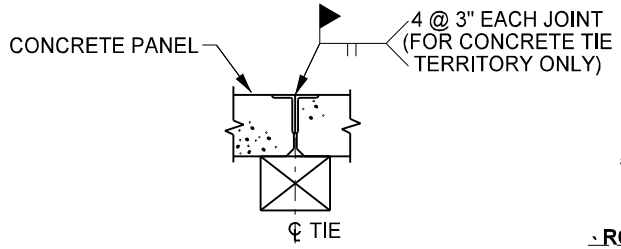


## JOINT BETWEEN PANELS

INTERIOR JOINTS BETWEEN PANELS MUST REST ON CENTER LINE OF A WOOD OR CONCRETE TIE AS SHOWN

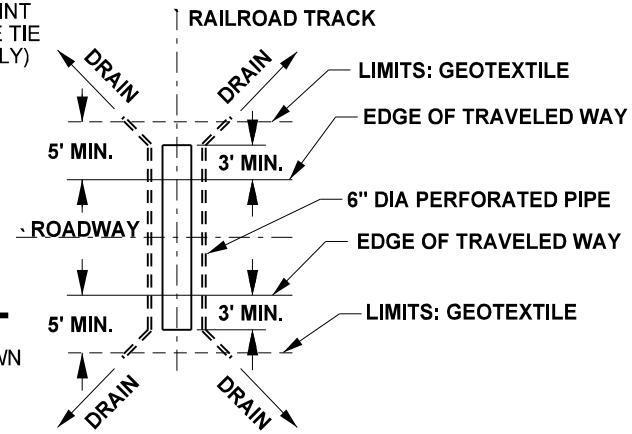


## TYPICAL PIPE LAYOUT

**NOTE:**
**GEOTEXTILE & PIPE TO BE INSTALLED ONLY AT LOCATIONS WHERE REQUIRED BY STATE OR LOCAL AGENCIES OR WHERE DESIGNATED BY CHIEF ENGINEER.**

NOTES:

1. CROSSING PANEL SUPPORT THROUGH THE CROSSING MUST BE UNIFORM. CONCRETE TIE SPACING IS TO BE A MAXIMUM OF 24" CENTER TO CENTER. WOOD TIE SPACING TO BE MAXIMUM OF 19 1/2" CENTER TO CENTER. TIE SPACING MUST BE ADJUSTED TO SUPPORT THE ENDS OF THE PANELS
2. CROSSING SITE IS TO BE INSPECTED PRIOR TO START OF INSTALLATION TO DETERMINE THAT PROPER DRAINAGE AND SURFACE SUPPORT IS PROVIDED, TRACK GRADE IS UNIFORM AND EXISTING TIES ARE AT LEAST 10' LONG.
3. IF CONDITIONS WARRANT, SITE IS TO BE OVER-EXCAVATED AND CROSSING DRAINAGE SYSTEM INSTALLED USING COMPACTED, WELL GRADED GRANULAR FILL; SUBBALLAST, GEOTEXTILE AND PERFORATED DRAINAGE PIPE (IF REQUIRED) INSTALLED PER DETAILS OF THIS DRAWING.
4. GEOWEB UNDERLAYMENT RECOMMENDED FOR ALL ROAD CROSSING INSTALLATIONS.
5. ADDITIONAL SITE DRAINAGE INCLUDING PROPER DRAINAGE AT EACH QUADRANT OF CROSSING SHALL BE COMPLETED TO ENSURE CROSSING DRAINAGE.
6. PRECAST PANELS ARE TO BE HANDLED AND SUPPORTED AT SPECIFIED LIFTING INSERT LOCATIONS ONLY. LIFTING EQUIPMENT AND CONNECTION INSERTS ARE TO BE PROPERLY SIZED TO HANDLE THE LENGTH OF PANELS BEING INSTALLED. RING LIFTING DEVICES ARE AVAILABLE FROM COMPANY WAREHOUSE.
7. APPROACH ASPHALT ROADWAY PAVING IS TO MEET STATE DOT HIGHWAY SPECIFICATIONS AND INSTALLED ACCORDINGLY. ASPHALT IS TO BE INSTALLED WITH PAVER WITH MAXIMUM 3" LIFTS AND LAID PARALLEL TO CROSSING TO MINIMIZE APPROACH SETTLEMENTS.
8. GEOTEXTILE AND PIPE TO BE INSTALLED ONLY AT LOCATIONS WHERE REQUIRED BY STATE OR LOCAL AGENCIES OR WHERE DESIGNATED BY CHIEF ENGINEER.
9. GALVANIZED ELASTIC FASTENERS ARE TO BE USED WITHIN THE CROSSING AREA. PANDROL E-CLIPS TO BE USED ON WOOD TIE CROSSINGS AND SAFELOK CLIPS ON CONCRETE TIE CROSSINGS.
10. ALL RAIL JOINTS IN CROSSING AREA TO BE WELDED, DO NOT INSTALL BOLTED JOINT BARS.

| REQUIRED COMPONENTS | |
|---|---|
| RING LIFTING DEVICE | 410-1371 |
| 3/4" TORX SCREW FOR WOOD TIES (STD DWG 131500) | 130-5400 |
| ELASTOMERIC BEARING PAD FOR 141 LB. RAIL ON WOOD TIES | 540-0203 |
| CONFORMAL ELASTOMERIC BEARING PAD FOR 10'-0" CONCRETE TIES | 503-6315 |
| CONFORMAL ELASTOMERIC BEARING PAD FOR 8'-6" CONCRETE TIES | 503-6312 |
| END RESTRAINT FOR CONCRETE TIES (ONLY) | 540-1925 |

| OPTIONAL COMPONENTS | |
|---|---|
| 20' SECTION 6" PERFORATED PIPE | 510-3201 |
| 6" ADJUSTABLE ELBOW | 510-3557 |
| 6" PIPE BANDS | 510-3379 |
| 100' ROLL GEOTEXTILE | 550-0119 |
| GEOWEB PANEL | 550-0120 |
| ATRA KEY (BOX OF 450) | 550-0122 |

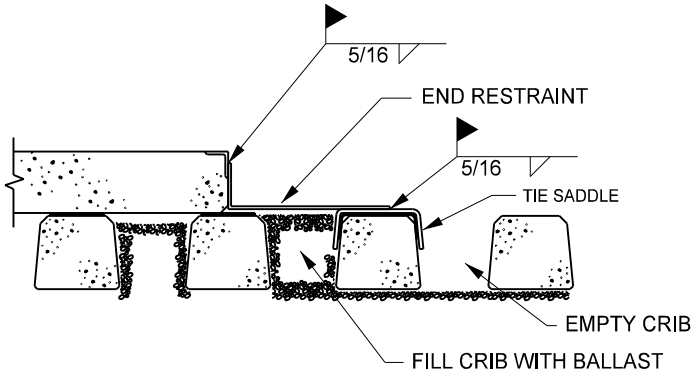


## END RESTRAINT DETAIL (FOR CONCRETE TIES ONLY)

**UNION PACIFIC RAILROAD ENGINEERING STANDARDS**

# INSTALLATION OF ROAD CROSSINGS W/ PRECAST CONCRETE PANELS

UNION PACIFIC

APPROVED: Eric Debringer
VP ENGINEERING
ADOPTED: DEC. 19, 1987
REVISED: DEC. 9, 2019
FILE NO.: 0304J

STD DWG
0304J
PAGE 2 OF 2